AQUAFORM Inc. Sp. z o.o
Przemysłowa 12-14, 32-070 Czernichów, PL, +48 12 270 21 22, office@aqform.com, https://www.aqform.com

Last update on 2018-03-11 20:45. More details available at https://www.aqform.com/en/RL1011

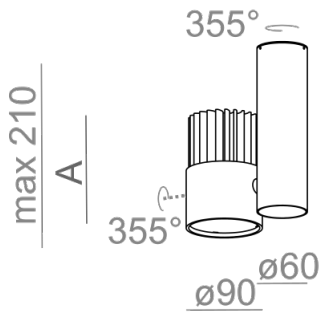

ROLL simple LED spot

ROLL simple LED reflektor

Category: spotlights
Power dependent on version
Light source: LED, integrated

Integrated light source
Gear included.

Planned withdrawal date: 01.06.2022.

Tolerance for dimensions ± 1mm

Warranty period 5 years

AVAILABLE FINISHES:
STRUCTURE ADDITIONAL

AVAILABLE VERSIONS:

H930	High power - High power	3000K	CRI>90
L930	Low power - Low power	3000K	CRI>90
M930	Medium power - Medium power	3000K	CRI>90
H940	High power - High power	4000K	CRI>90
L940	Low power - Low power	4000K	CRI>90
M940	Medium power - Medium power	4000K	CRI>90

AVAILABLE FINISHES:

STRUCTURE			
black structure	-12	white structure	-13
gold structure	-19		
ADDITIONAL			
grey	-16	copper	-17